455 - FOR.214

PROGRESSIVE ARCHITECTURE

July, 1960

U. S. PATENT OFFICE

JUL 18 1961

DIVISION 51

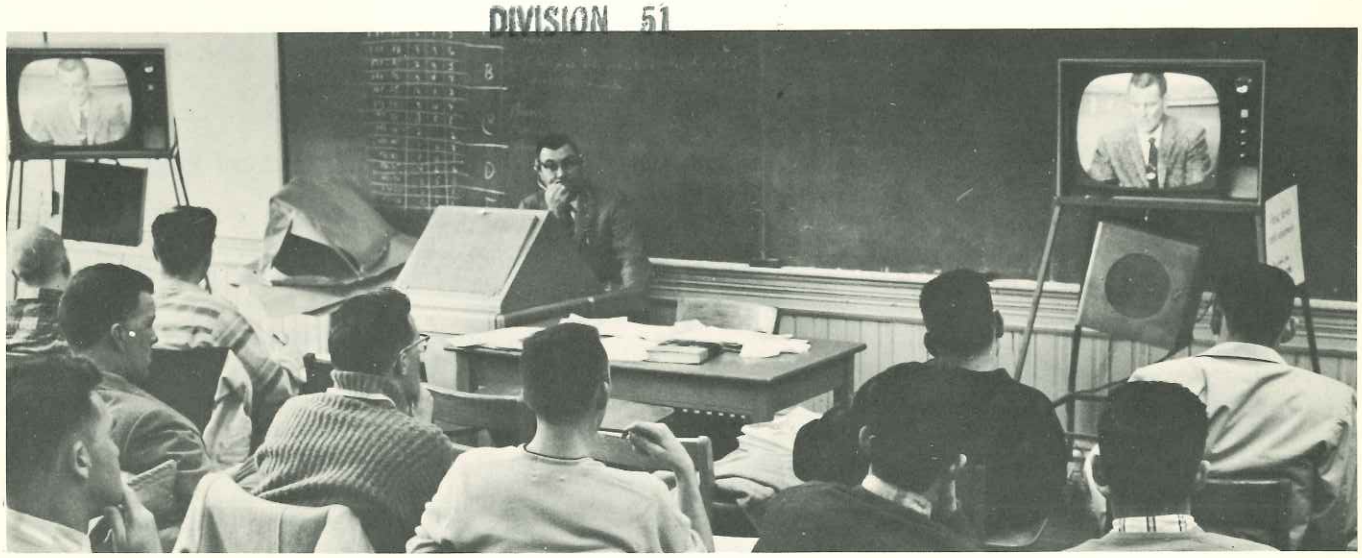

Closed-Circuit TV

BY ROBERT E. VENDELAND

Until recently, a major block in the development of closed-circuit television has been the inflexibility of available systems. An architect planning a system with his client has had to determine, before installation, the exact camera (studio) locations and receiver outlets. If the client found additional applications for closed-circuit television after the system was installed, new studio locations could not be added without major system changes. In this article, the author—who is Manager, Closed-Circuit Division, Jerrold Electronics Corporation—discusses types of closed-circuit systems, data required for the architect's electrical engineer, and suggestions for obtaining pertinent information from the client; and describes a newly developed system that adds flexibility by providing wall outlets into which either camera or receivers can be plugged, permitting distribution of a variety of functions—video, audio, and control—all over one cable.

AF

308
455/3.1

Visual communications—possible today through television—have added a new architectural consideration as important to early planning as the placement of windows. Closed-circuit television is in effect a two-way window connecting rooms within buildings, and between buildings, in combinations limited only by the imagination.

Architects familiar with the application of master television antenna systems in apartment houses and institutions recognize the desirability of early conduit planning and are fully aware of the basic considerations. Closed-circuit television, on the other hand, adds mechanical requirements to planning which demand far more consideration than that for conduit. As this private television service—fast becoming an integral part of the operation of many institutions—expands its utility in the transmission of business data, face-to-face meetings, display of product models, education and sale of goods and services, architects will be asked to provide such facilities in more and more major buildings.

It is one thing to contemplate the future for closed-circuit television, to make sweeping predictions of things to come, and to tell the architect and his electrical engineer that they must consider television for schools, hospitals, and office buildings. It is not so simple a matter, however, to pin down *exact* requirements, design the proper conduit system, provide additional lighting, and allow for larger air-conditioning capacity—all within a tight budget. It is especially difficult when the future owner cannot predict his *exact* use of his television system.

As a specialist in visual communications, the author has found that one of the major difficulties facing the architect, as he evaluates television for his client, is that too little information can be obtained in answer to the following questions:

1 What can television do today that makes it worth considering?

2 What will television be able to do for the owner in the immediate future that will make built-in installation worth while?

3 What problems can be expected later, if the owner elects to save on his initial investment by ignoring visual communications requirements?

This article will attempt to deal with the capabilities of visual communications, touch on the major considerations that should be discussed with the client, and outline the information that is vital to the engineer who will be required to convert future communication objectives into hard, minimum cost conduits.

Types of Closed-Circuit Systems

Closed-circuit television, architecturally considered, falls into three major types of systems:

1 The easily explained and much publicized "observation" system. The camera is usually placed in a position appropriate for viewing an operation or a location that is not easily viewed directly. In such cases, the camera and viewer are located relatively close together and a single operator observes a single picture on a single monitor. As this type of closed-circuit "observation" system is refined, a series of these single systems terminates in one place and the observer multiplies his usefulness by observing several locations at once. Machine watching, door watching, shoplifter watching, and just plain "watching" fall into this category. Most security systems are of this type.

2 The "dissemination of information" system. Information important to tenants throughout a building or group of buildings is distributed as television pictures, through cables, to all parts of the area. Usually a small studio or group of studios is established in one part of the area and information is cablecast from this location. Pictures can be fed into the network from off-the-air pick-up, microwave pick-up, telephone company facilities, or from selected locations within the network itself. Educational television, private entertainment, national closed-circuit medical telecasts, national sales meetings over closed-circuit television, front-door watching in an apartment house so that the tenant knows whether she wants to push the door-release button, and ticker-tape telecasts within an office all fall into this second category.

3 The "two-way exchange of pictures" requirement rounds out the major uses for television in visual communications. The ability to show a product or talk to a group located at a remote point in the building, while observing reaction on a monitor, is the most sophisticated use for closed-circuit television, and the most difficult to provide within a tight budget. The ability to project pictures in both directions over a cable connecting the penthouse executive offices of a 20-story building to a sales conference room on the second story, saves valuable executive time, and can contribute spark to a sales meeting.

The architect, discussing television considerations with his client, can assist his engineer immeasurably if he leads the future owner's thoughts to the above three possibilities. The author has found that the vast majority of television applications —regardless of industry, building type, or institution—will fall into one of these categories. Once the potential owner considers television as an aid to building security (Case 1), as an information-disseminating service (Case 2), or as a two-way communication channel (Case 3), the architect is well on the way to gathering the program information needed by the engineer.

Data for Electrical Engineer

When translating a *security requirement* to his engineer, the architect should provide answers to the following questions:

A Where will the security control center be located?

B What locations must be under television surveillance?

C What operations, such as opening and closing of doors, talking to people, or badge identification, must be performed remotely from the security control center?

D What special environmental problems will confront the engineer, such as climate, vibration, dust, etc.?

When considering television for the *dissemination of information,* the architect should consider the following questions:

A Must the system deliver off-the-air entertainment television channels? How many? How many are local channels? How many are distant?

B Where must entertainment be delivered? Will one outlet per tenant be adequate? Is there a preference for location within a particular room?

C Will this system be called on to deliver private closed-circuit telecasts from

BLOCK DIAGRAMS OF TV-DISTRIBUTION SYSTEMS WITH J-JACKS

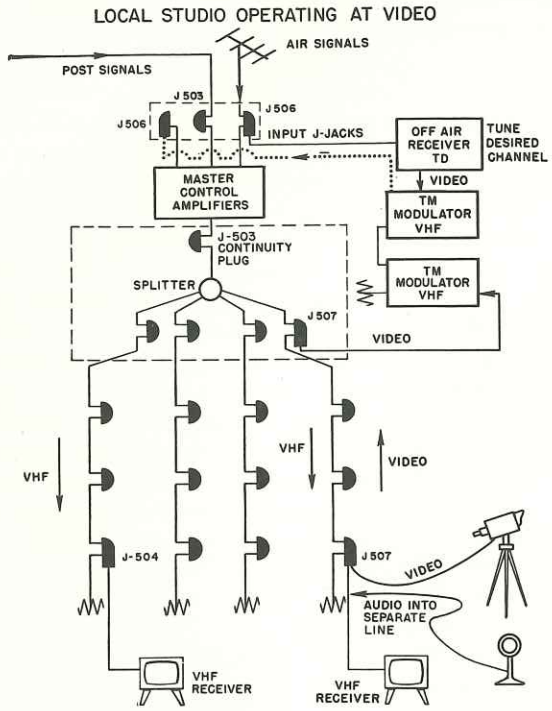

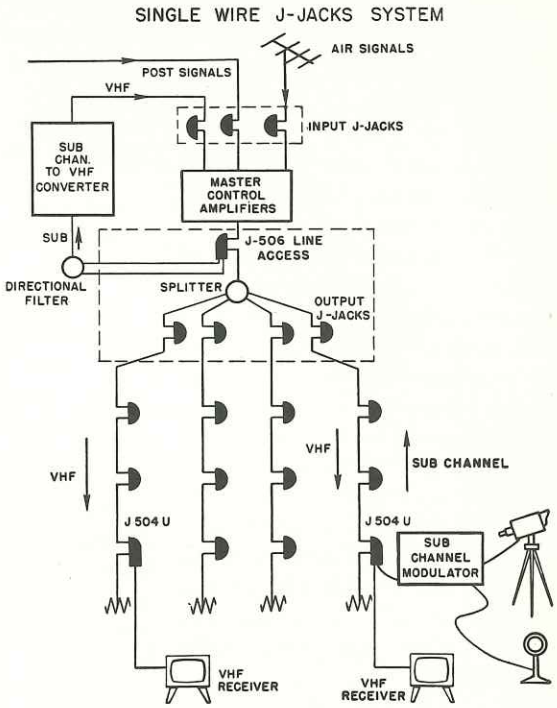

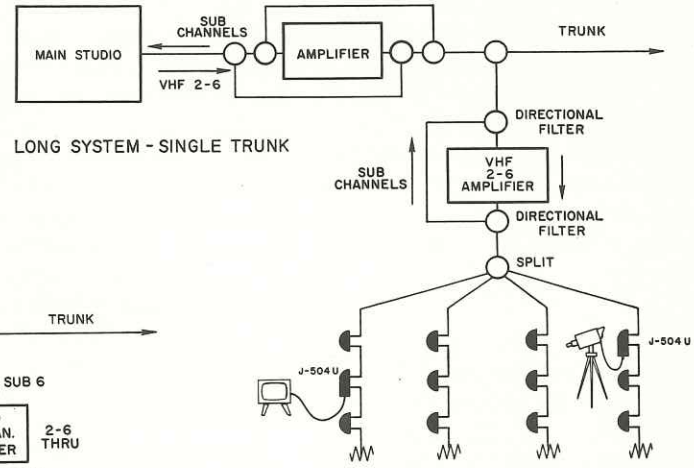

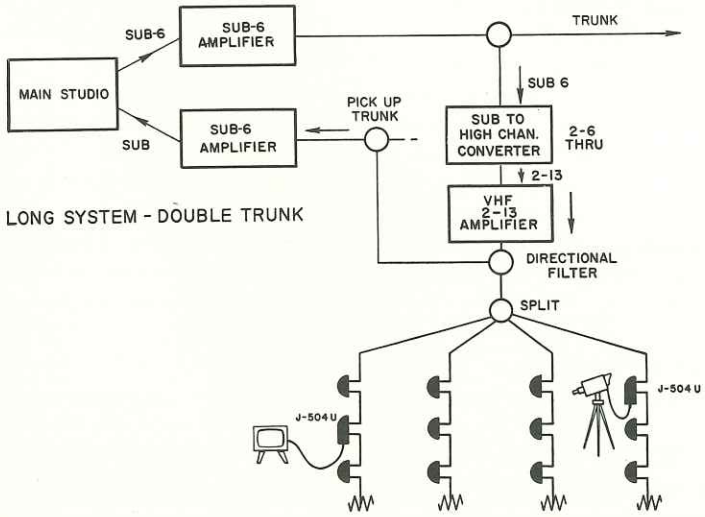

the telephone company facilities, to all locations—or must these go to selected locations?

D Will this system have its own studios? Where will they be located?

E Will remote originations be necessary? Where?

F Will these originations go to all—or to selected tenants? Can the selection be determined now, or must it be at random?

G Will it be desirable to originate programs within the building to feed to telephone company facilities for national closed-circuit telecasts?

The remaining category of *two-way television* is more difficult to specify. The ability to install a television-telephone is within the state-of-the-art today, but present-day costs make such installations impracticable. However, key two-way visual communication points can be determined and can be justified as an investment. Visual data systems, which are no more than two-way television links, are being used in banks today; engineers exchange product and blue-print information over two-way television links. The architect must try to answer the following questions:

A Where are key people or where is key information located?

B Who must see the people or the data?

C What type of information must be shown? Example: an 8½" x 11" page of elite type is the limit of today's average industrial TV camera.

Determining Needs

It usually helps the user's thinking, in determining his needs, if questioning takes the following direction:

1 What are the major departments within the organization?

2 What information is vital to people *within* the department? Will a picture of any person, product, or data be of value to another in the department? Will this picture help him do a better job?

3 Can any operation be by-passed if television is used within a department?

4 Can this particular department do its job better if it has a picture from another department within the organization?

5 Can this particular department do its job better if it sends a picture to another department to speed up a service the other department does for this one?

6 Can orientation of new employes be speeded up with a picture?

7 Can training of employes be improved through the use of television?

8 Can personnel interviewers do a better job for this tenant if they can show a picture to prospective employes?

9 Will the ultimate supervisor of the prospective employe save time if he can observe portions of the interview, and actually "meet" the interviewee over TV?

Answers to these questions may be supplied by the building owner for each department of his organization, and from this data the architect and engineer can develop system requirements.

Newly Developed System

A new concept in closed-circuit television has been developed by Jerrold Electronics. As a solution to the problem of providing systems that would permit the architect a maximum in future capabilities, at a conservative investment. Attempting to meet the most complex requirement of any of the above systems—that of two-way television—engineers were faced with the design problems of originating into a coaxial cable on one day, while taking a picture out of this same line on the next. In some locations both would have to be accomplished simultaneously.

The solution to the problem is quite simple, when the techniques employed are those that broadcasters use. In essence, this system becomes a self-contained, private-broadcast band for each major tenant of a building. The J-Jacks system consists of a series of cable plug-in devices. Each plug-in unit is, in effect, an antenna that works into a cable much as a home antenna or a TV station's antenna works in the air. As the owner wishes to transmit a picture from one part of his building to another, he selects a TV channel, broadcasts into the cable on this channel, and tunes to observe it with a receiver plugged into the cable network in another part of the building. Since no signals radiate from the cable, the owner is his own Federal Communications Commission. He allocates frequencies as he sees fit. The entire broadcast band of AM, FM, and Television is at his disposal.

When the engineer designs a J-Jacks system, he provides a private-cable network for each tenant or department. These individual networks are cross-connected through trunk lines for interchange of information.

Once the basic networks are established, it is a simple matter to insert off-the-air programs, private closed-circuit programs, and local originations into the trunk lines. Since the system consists of easily changed plug-in devices, it can be reconnected at will. Every TV receiver outlet can become a camera input in a matter of seconds. Large complex systems have been installed which actually permit two-way voice conversations, as well as complete remote control of the cameras over the same, single cable network.

Once the prospective owner decides that he wishes to provide entertainment or educational television throughout his building and can justify this investment, the J-Jacks system provides for closed-circuit origination at every receiver outlet. Armed with the flexibility of this system, the engineer can, at a minimum investment, provide for most visual communication requirements through standard 4x4 electrical boxes and ¾" thin-wall conduit. However, to specify conduit runs properly, to locate outlets properly, and to assure proper zoning of private networks, the architect should attempt to provide his engineer with answers to as many of the questions raised in this article as possible.

Jerrold factory trained installation contractors are located throughout United States. Free layout service available. Call or write.

JERROLD ELECTRONICS CORPORATION
DISTRIBUTOR SALES DIVISION
The Jerrold Building • 15th and Lehigh
Philadelphia 32, Pennsylvania

KM-3-BHSB Printed in U.S.A.